arXiv:quant-ph/0512033v1 4 Dec 2005

Application of an all-solid-state, frequency-doubled Nd:YAP laser to the generation of twin beams at 1080 nm

Ruixiang Guo, Julien Laurat, Jiangrui Gao, Changde Xie, and Kunchi Peng
State Key Laboratory of Quantum Optics and Quantum Optical Devices,
Institute of Opto-Electronics, Shanxi University, Taiyuan, Shanxi, China 030006

A laser-diode-pumped intracavity frequency-doubled Nd:YAP KTP laser is presented. Over 110 mw of TEM00 single-frequency output power at 540-nm wavelength was obtained. The output green laser was employed to pump a semimonolithic nondegenerate optical parametric oscillator to produce intensity quantum correlated twin beams at 1080 nm, and the maximum quantum noise squeezing of 74 %(5.9 dB) on the intensity difference fluctuation between the twin beams is observed. The threshold was reduced and the stability was increased significantly when compared with similar lamp-pumped systems.

I. INTRODUCTION

Nonclassical state light with strong quantum correlation is an important light source for quantum measurements and quantum information process. Continuous wave optical parametric oscillators (OPOs) are among the most efficient devices likely to produce nonclassical states of light such as the generation of bright twin beams and quadraturesqueezed state of light [1, 2, 3, 4, 5]. The nonclassical state of light generated by OPO has been successfully utilized in sub-shot-noise measurement, quantum nondemolition measurement, quantum teleportation, and quantum secret communication [3, 6, 7, 8]. However, aside from the improvement of the degree of noise suppression, a central issue is the establishment of nonclassical light generation devices with long-term stability, compactness, and high efficiency for practical application. With the arrival of high-power output diodes, the prospect of an all-solid-state source as an alternative to the arc-pumped laser has shown its special advantage [9]. The commercial availability of diode-pumped monolithic miniature Nd:YAG lasers [10] with their high intrinsic frequency stability has opened up new opportunities for squeezed-light generation at 1064 nm and its harmonics [11, 12, 13]. However, it is impossible to realize frequency doubling or degenerate frequency downconversion in KTP crystals through type-II noncritical phase matching using a Nd:YAG laser as a pump source[8]. Following the report of Garmash et al. [14] about type II noncritical phase matching in an α-cut KTP crystal at 1080 nm, several groups designed the arc-lamp-pumped frequency-doubled and stabilized Nd:YAP (Nd: YAlO3) laser operating at 1080 and 540 nm and accomplished excellent experiments on nonclassical light generation and application [1, 2, 15, 16]. Although several groups have worked on the laser-diodepumped Nd:YAP laser with fundamental wave output at 1080 nm [17, 18, 19, 20] a diode-pumped intracavity frequency doubling YAP/KTP laser with singlefrequency output of green light at 540 nm has not been published to our knowledge. Indeed, the design of the intracavity frequency-doubled laser is much more complicated. Here we present a compact Nd:YAP/KTP laser, longitudinally pumped by a single 2.5-W cw diode bar. Over 110 mW of singlefrequency output power at 540 nm wavelength with a threshold pump power of 360 mW and a slop efficiency of approximately 8% were obtained. The fluctuation of power is less than ±1% during three hours, and the frequency float is less than 3 MHz/min at the case of free running. The laser was employed to pump a single semimonolithic cw nondegenerate OPO, consisting of an α-cut KTP crystal for type-II noncritical phase matching at 1080 nm and an concave output coupler with the transmission $T_1(1080nm) = 3\%$ and $T_2(540nm) = 11\%$. The oscillation threshold of NOPO was only 3.7 mW, and a maximum intensity-difference squeezing of 5.9 dB (74%) are observed at 3 MHz; if the efficiency of the detection system is taken into account, the actual squeezing of output light from the NOPO [4] should be 81% (7.2 dB). Compared with our lamp-pumped system of twin-beam generation [2], the threshold was significantly reduced, the quantum correlation between twin beams was increased, and the stability was improved. The all-solid-state system can operate stably to generate nonclassical light over one hour when the active frequency-stability system of the OPO is turned on [2].

II. EXPERIMENTAL ARRANGEMENTS AND RESULTS

A. All-Solid-State Frequency-Doubled Nd:YAP/KTP Laser

The experimental setup for all-solid-state Nd:YAP/KTP laser and the generation system of twin beams at 1080 nm are shown schematically in Fig. 1. The base of the laser housing is an invar steel structure on which a four-mirror (M1M4) bow-tie ring cavity was built. The laser cavity consists of two concave mirrors with the radius of curvature $R = 50mm$ (M1,M2) and two plane mirrors (M3,M4). All mirrors have a reflectivity of more than 99.5% at 1080 nm. M1 and M2 are separated by 57 mm, and M3 and M4 are separated by 120 mm; the total length of the ring cavity is 330 mm. The incident angles on M1

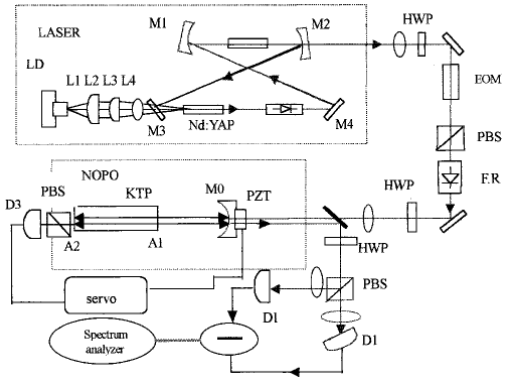

FIG. 1: Experimental scheme of an all-solid-state frequencydoubled Nd:YAP laser and NOPO for generation of twin beams at 1080 nm. Both the laser and the NOPO are laid in a sealed box with clean air. EOM, electro-optic modulator; PZT, piezoelectric transducers; F.R, Faraday rotator; HWP, half wavelength plate; P1, P2, P3, polarized-beam-splitter; D1, D2, D3, detectors.

andM2 are made as small as possible to reduce both the astigmatic from the concave mirrors and the polarization imbalance of the KTP crystal. The M3 and M2 are the input and output couplers with transmissions of 90% for the pump light at 802 nm and of 90% for the second harmonic wave at 540 nm, respectively. This geometry gives a $1/e^2$ beam radius of approximately 40 m between the two concave mirrors where an α-cut KTP frequency doubler of $3x3x10mm^3$ is located and the KTP is heated to the phasematching temperature of about 63°C with a precision of ±0.01°C. A Faraday rotator and a halfwavelength plate ($\lambda/2$) for 1080 nm is placed in the cavity to enforce unidirectional operation. The main feature of laser is a b-axis cut Nd:YAP rod that is 2 mm and 4 mm long and pumped by a 2.5-W diode-laser bar (Model S-81-2700c-200-h, Coherence Corporation, 80 Rose Orchard Way, San Jose, Calif. 95134) with a coherent radiation of about 805 nm at 25 C from a 200 m x 1 m junction. In the parallel and the perpendicular directions to the junction, the beam divergences are $\theta_{\|} = 7.45^{circ}$ and $\theta_{\perp} = 2.06^{circ}$ for a FWHM, respectively. The light is collimated and focused onto the YAP crystal by a self-focus rod (L1, pitch = 0.22), two cylindrical lenses (L2, f = 20 mm; L3, f = 40 mm) and one spherical lens (L4, f = 50 mm). After the transmission from the beam collimated system, the pump power before M3 is about 1.8 W. The collimated farfield spot of the pump beam was nearly square with the beam divergence of 1.2 mrad. The diode beam was focused on the crystal with a spot size of approximately 60 m x 60 m, and a divergence of 60 mrad. The 1%-doped YAP crystal is placed between the two plane mirrors, taking into account the laser rod with a thermal focal length about 300 mm at 1.8 W pump power, and the beam waist in YAP is about 200 m (half width), so that all pump light is confined in the TEM00 of laser. The YAP crystal is an optical biaxial crystal, thus both the polarized absorption spectra and the polarized fluorescence spectra present obviously anisotropic characteristics. The peak absorption and the peak emission were found when the polarization of pump field was parallel with the c-axis, where the peak absorption is 14 cm^{-1} at 802 nm and the peak emission cross section is 3.0 $10^{-19}cm^2$ at 1080 nm [15]. Adjusting the orientation of YAP crystal to make its c axis parallel to the polarization of pump light and tuning the temperature of the laser diode at 14.5 °C to emit the wavelength of 802 nm, we obtained the maximum pump absorption efficiency of more than 96%. In the design of the laser, great care was taken to reduce the intracavity losses for higher conversion efficiency, and we obtained some benefits from the anisotropic characteristics of the YAP crystal. For example, no polarized component and frequency choosing component are needed in the cavity, and therefore the intracavity loss is decreased to the largest extent; the total round-trip cavity loss owing to the insertion loss of antireflection-coated components (half-wavelength plate, KTP, YAP and TGG crystal) and the residual loss of the four high-reflection cavity mirrors is estimated to be about $\sim 3\%$.

The threshold of laser oscillation was reached when the pump power on the laser rod was about 360 mW, and a single-frequency of over 110 mW output power at 540-nm wavelength and a slop efficiency of approximately 8% were obtained at the laser pump power of 1.8 W. The losses of the collimate optics and intracavity components influence the improvement of efficiency. The fluctuation of power is less than ±1% during three hours, and the typical scanning Fabry-Perot trace for the 1080-nm leakage (Fig. 2) confirmed its single-frequency operation with a frequency float of 3 MHz/min at the case of free running, and the laser beam was TEM00 with typical M^2 values of 1.14 and 1.03 in the horizontal and vertical planes, respectively.

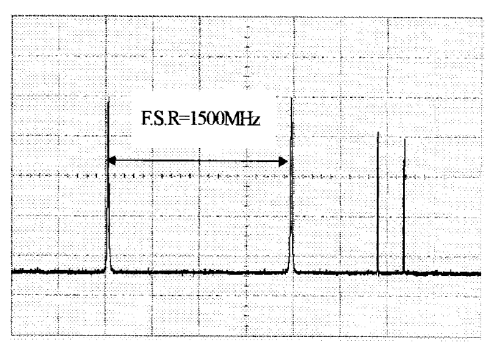

FIG. 2: Typical scanning Fabry-Perot trace for the 1080-nm leakage while the power of 110 mW is generated at 540 nm, demonstrating the single-frequency operation of laser. F.S.R in figure stands for free spectral range.

B. Triply Resonant Nondegenerate OPO

The triply resonant NOPO contains a 7-mm-long α-cut KTP crystal heated to approximately 63 °C for type-II noncritical phase matching to generate quantum correlated twin beams at 1080 nm through a frequency downconversion process and a concave mirror M0 with 30-mm radius of curvature that is used as both an input and an output coupler. The KTP crystal is polished flat and antireflection- and high-reflection-coated at both 540 nm and 1080 nm on the facets A1 and A2, respectively. The concave mirror with transmission $T_1(1080nm) = 3\%$ and $T_2(540nm) = 11\%$ is placed 23 mm from the A1 facet of crystal. The semimonolithic cavity is chosen for its mechanical stability and slight intracavity loss. The escape efficiency of 0.893, calculated from transmission T1, and the total dissipate loss of 0.36% for 1080 nm, which is measured from the finesse of cavity, imply a theoretical squeezing of 7.8 dB at the analyzing frequency of 3 MHz (see Eq. 1 in Ref. 4). The pump light at 540 nm from the laser passes through an isolator (F.R) and is carefully mode matched into the NOPO (the matching efficiency is better than 85%). For our OPO with high finesse for the signal and idler fields and low finesse for the pump field, there is at least one pair of signal and idler modes that can resonate within a pump resonance peak, therefore triply resonant OPO operation can be fulfilled only through adjustment of the length of the cavity [21]. The cavity bandwidth is 22 MHz, which results in a squeezing bandwidth from 0 MHz to 10 MHz without a significant penalty in the noise reduction. The Pound-Drever-Hall method is used to lock NOPO on resonance. The pump light is modulated electrooptically with an electrooptic modulator at 19.2 MHz, and the signal and the idler output from the facets A2 of the KTP crystal pass through a half-wave plate and polarizer P3 polarizing horizontally. Then the output is monitored by a high speed detector D3. Since the electrooptical signal modulated on the pump wave is transmitted to the generated signal and idler waves within the cavity and can be detected on the leakage field leaving from the facets A2 of the KTP crystal,22 mixing the detected signal from D3 with the modulation source of the pump waves and low-pass filtering then results in a dispersion-type error signal, that can be fed back to the piezoelectric transducer mounted on M0 to lock the cavity on-resonance by a servo loop (we use homemade proportional-integraldifferential to provide the electronic feedback control). The measured minimum oscillation threshold of NOPO is about 3.7 mW in the case of exactly triple resonance. A visible-to-infrared power conversion of 50% is demonstrated under the pump power of 18.7 mW at 540 nm. The measured wavelengths of the downconverted twin infrared beams at the temperature of 63.54 C are $\lambda_1 = 1080.030nm$ and $\lambda_2 = 1079.996nm$. The signal and idler beams from M0 are separated by a polarized beam splitter and then focused on a pair of InGaAs pin photodiodes EpitaxxETX 500 [Epitaxx Inc., 7 Graphics Drive, West Trenton, N.J. 08628) D1, D2 diameter 500 m] with a tilting of the Brewster angle to the polarization plane of the monitored beams in order to reduce the losses of reflection on the photodiode surface;15 their quantum efficiency is measured to be 94±2%. All of the optical surfaces between the OPO cavity and the detectors are antireflection coated. The output photocurrents from the detectors of the ETX500 diode is amplified by a two-stage transimpedence amplification circuit with two operational amplifiers (AH0013, Optical Electronics, Inc., 4455 S. Park Avenue 106, Tucson, Ariz. 85714 and Mar6, Mini-Circuits, Inc., P.O. Box 350166, Brooklyn, N.Y. 11235), and then subtraced with a 180 power combiner (Minicircuit ZSCJ-2-1; the frequency range is from 0.5 to 20 MHz). The noise on the resulting difference is monitored by a spectrum analyzer. The linearity of detection was verified by a dc saturation measurement, and this photo detector can take up to 7.5mW of optical power without any observable saturation effect. The measured electronic common mode rejection ratio is 28 dB at 4 MHz. The measured electronic noise floor of detection system is about 22 dB lower than the shot noise. There is quite large excess noise (15 dB above shot noise at 3 MHz) on signal and idler beams individually.

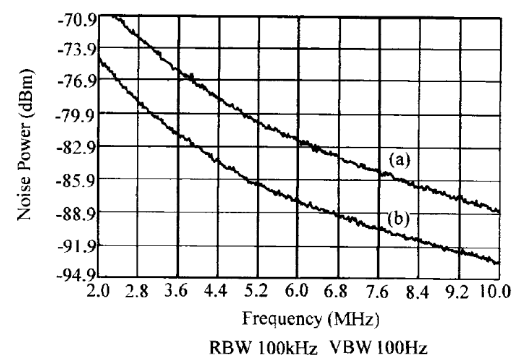

FIG. 3: Noise power spectrum of intensity difference between twin beams at a pump power of 18.7 mW. Resolution bandwidth, 100 kHz; video bandwidth, 100 Hz. (a) shot-noise limit, (b) noise spectrum of intensity difference between the twin beams.

The experimentally measured squeezing spectrum of intensity difference fluctuation between twin beams is displayed in Fig. 3, in which trace (a) is the shot-noise limit measured through rotation of the polarization of the output signal and idler beam to 45 relative to the polarization direction of the polarized beamsplitter4; trace (b) is the squeezed-noise power spectrum. The measured maximum squeezing is 5.9 dB at 3 MHz and 7.2 dB after taking into account the measurement efficiency of 90% (including the detector quantum efficiency of 94% and the transmitting losses of 96%), which is quite close to the theoretically calculated value (7.8 dB).

III. CONCLUSION

We designed and demonstrated a reliable and compact all-solid-state single-frequency Nd:YAP/KTP laser for the first time, and its output second harmonic wave was employed as a pump source of a NOPO to produce the nonclassical light field. Since the wavelengths of 1080 nm and its second-harmonic generation 540 nm can perform the type-II noncritical phase matching in an α-cut KTP, the laser has important and potential application in the nonclassical light generation and future experimental quantum optical and quantum information. The output transmission of 3% at 1080 nm used in experiments limited the squeezing; if the transmission of coupler is increased by e.g., 5%, the larger squeezing over 10 dB will be theoretically expected.

This work was supported by the National Nature Science Foundation of China (approval 69837010) and the Younger Science Foundation of the Shanxi Province (approval 20001015).

[1] Z. Y. Ou, S. F. Pereira, H. J. Kimble, and K. C. Peng,*Realization of the Einstein-Podosky-Rosen paradox for continuous variables*, Phys. Rev. Lett. **68**, 3663 (1992)

[2] K. C. Peng, Q. Pan, H. Wang, Y. Zhang, H. Su, and C. D. Xie, *Generation of two-mode quadrature-phase squeezing and intensity-difference squeezing from a cw-NOPO*, Appl. Phys. B **66**, 755 (1998)

[3] H. Wang, Y. Zhang, Q. Pan, H. Su, A. Porzio, C. D. Xie, and K. C. Peng, *Experimental realization of a quantum measurement for intensity difference fluctuation using a beam splitter*, Phys. Rev. Lett. **82**, 1414 (1999)

[4] A. Heidmann, R. J. Horowicz, S. Reynaud, E. Giacobino, C. Fabre, and G. Camy, *Observation of quantum noise reduction on twin laser beams*, Phys. Rev. Lett. **59**, 2555 (1987)

[5] Y. Zhang, H. Wang, X. Y. Li, J. T. Jing, C. D. Xie, and K. C. Peng, *Experimental generation of bright two-mode quadrature squeezed light from a narrow-band nondegenerate optical parametric amplifier*, Phys. Rev. A **62**, 023813 (2000)

[6] A. Furusawa, J. L. Sorensen, S. L. Braunstein, C. A. Fuchs, H. J. Kimble, and E. S. Polzik, *Unconditional quantum teleportation*, Science **282**, 706 (1998)

[7] S. F. Perreira, Z. Y. Ou, and H. J. Kimble, *Backaction evading measurements for quantum nondemolition detection measurement and quantum optical tapping*, Phys. Rev. Lett. **72**, 214 (1994)

[8] J. R. Gao, F. Y. Cui, C. Y. Xue, C. D. Xie, and K. C. Peng, *Generation and application of twin beams from an optical parametric oscillator including an α-cut KTP crystal*, Opt. Lett. **23**, 870 (1998)

[9] K. I. Martin, W. A. Clarkson, and D. C. Hanna, *3 W of single frequency output at 532 nm by intracavity frequency doubling of a diode-bar-pumped Nd:YAG ring laser*, Opt. Lett. **21**, 875 (1996)

[10] T. J. Kane and R. L. Byer, *Monolithic, unidirectional singlemode Nd:YAG ring laser*, Opt. Lett. **10**, 65 (1985)

[11] C. D. Nabors and R. M. Shelby, *Two-color squeezing and sub-shot-noise signal recovery in doubly resonant optical parametric oscillators*, Phys. Rev. A **42**, 556 (1990)

[12] P. Kurz, R. Paschotta, K. Fiedler, and J. Mlynek, *Bright squeezed light by second-harmonic generation in a monolithic resonator*, Europhys. Lett. **24**, 449 (1993)

[13] R. Paschotta, M. Collett, P. Kurz, K. Fiedler, H. A. Bachor, and J. Mlynek, *Bright squeezed light from a single resonant frequency doubler*, Phys. Rev. Lett. **72**, 3807 (1994)

[14] V. M. Garmash, G. A. Ermakov, N. I. Pavlova, and A. V. Tarasov, *Efficient second-harmonic generation in potassium titanate-phosphate crystals with noncritical matching*, Sov. Tech. Phys. Lett. **12**, 505 (1986)

[15] F. Hanson and P. Poirier, *Multiple-wavelength operation of a diode-pumped Nd:YALO$_3$ laser*, J. Opt. Soc. Am. B. **12**, 1311 (1995)

[16] Z. Y. Ou, S. F. Pereira, and H. J. Kimble, *Realization of the Einstein-Podosky-Rosen paradox for continuous variables in nondegenerate parametric amplification*, Appl. Phys. B **55**, 265 (1992)

[17] O. Guy, V. Kubecek, and A. Barthelemy, *Mode-locked diodepumped Nd:YAP laser*, Opt. Commun. **130**, 41 (1996)

[18] P. Poirier and F. Hanson, *Discretely tunable multiwavelength diode-pumped Nd:YALO laser*, Appl. Opt. **35**, 364 (1996)

[19] R. F. Wu, P. B. Phua, and K. S. Lai, *Linearly polarized 100-W output from a diode-pumped Nd:YALO laser*, Appl. Opt. **39**, 431 (2000)

[20] H. M. Kretschmann, F. Heine, V. G. Ostroumov, and G. Huber, *High-power diode-pumped continuous-wave Nd3 lasers at wavelengths near 1.44 mm*, Opt. Lett. **22**, 466 (1997)

[21] J. G. Rarity, P. R. Tapster, J. A. Levenson, J. C. Garreau, I. Abram, J. Mertz, T. Debuisschert, A. Heidmann, C. Fabre, and E. Giacobino, *Quantum correlated twin beams*, Appl. Phys. B **55**, 250 (1992)

[22] M. Bode, P. K. Lam, I. Freitag, A. Tunnermann, H. A. Bachor, and H. Welling, *Continuously-tunable doubly resonant optical parametric oscillator*, Opt. Commun. **148**, 117 (1998)